Installation Manual

1. Contents

1. Contents 1
2. Introduction 2
   2.1. This system is a professional home automation platform, ... 2
   2.2. It's assumed you have some understanding of hydronics and computers to follow this manual. 2
   2.3. Our automation platform is built within Home Assistant, ... 2
   2.4. Expect a full day to install all components and configure the settings. 2
   2.5. Check all components delivered as per the order 2
   2.6. Overview: 3
3. Home Automation Platform - Home Assistant 4
   3.1. Raspberry Pi (Rpi) 4
   3.2. Connecting Rpi to the local area network (LAN) 4
   3.3. You are now logged in as an administrator. 5
   3.4. Once logged in you are at the Home Page 5
   3.5. Overview 6
   3.6. WC configurator 6
   3.7. WiringCentral Panel 7
   3.8. Configuration 7
4. Temperature Sensors: 8
   4.1. Wired Temperature Sensors: 8
   4.2. Wireless Temperature sensors: 8
   4.3. Wired Temperature Sensor: DS18b20 8
   4.4. Wired Temperature Sensor DS18b20 probe 11
   4.5. NTC sensor probes 12
   4.6. Allocating sensors to thermostats 13
   4.7. Wireless Temperature sensors ESPNOW 14
5. Wiring Center Controller (WC Board) 20
   5.1. This is the heart of the hydronic automation controls. 20
   5.2. Components on the board: 20
6. Thermostats 21
   6.1. Operating the thermostat refer to the User Manual: 21
   6.2. Setting up the Thermostats 21
   6.3. Changing the name of the thermostat: 25
   6.4. Controlling more than 2 circuits on the one Zone / Thermostat 25

2. Introduction

2.1. **This system is a professional home automation platform,**

you need to read and follow this installation manual, for the system to function properly.

2.2. It's assumed you have some understanding of hydronics and computers to follow this manual.

2.3. Our automation platform is built within Home Assistant,

further researching Home Assistant will enable you to extend this platform far greater than just the hydronics, from lighting, security, to entertainment

2.4. Expect a full day to install all components and configure the settings.

2.5. Check all components delivered as per the order

2.5.1. Items required for a minimum working system:

- Temperature Sensors: Wired or Wireless also Receiver controller
- Wiring Centre Controller Board (WC Board)
- Raspberry Pi with SSD
- Actuators (or Zone valves), either 24vac - 230vac
- IP and Or Poe Switch
- Transformer 24vac if 24vac Actuators

Complete list of the various components, see under each section
See Figure 2.1

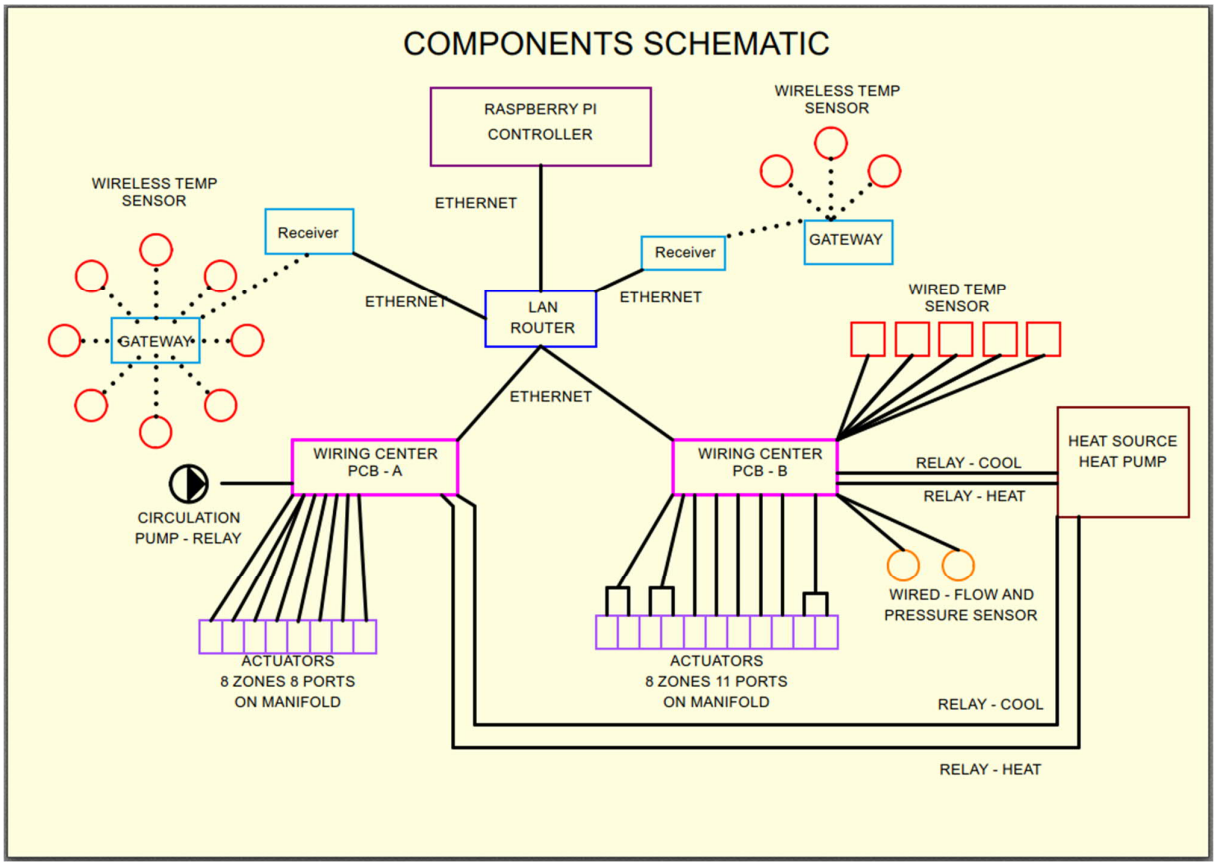

Figure 2.1

2.6. Overview:

2.6.1. Thermostats which are displayed within the software Home Assistant, (no physical thermostats), control the actuators on the Wiring Centre Controller board (WC Board), a total of 8 thermostats for each WC Board.

2.6.2. The actuators control the circuits/ports on the manifold.

2.6.3. The temperature for each room is displayed on each thermostat via the temperature sensor located in each room.

2.6.4. For Example: Bathroom thermostat calling for heat, thermostat will show “Heater On”

This will turn on the actuators for the circuits to the bathroom.

2.6.5. This will also turn on the circulation pump and the heat source

2.6.6. This manual explains:

2.6.6.1. Wiring the various components onto the WC Board and the temperature sensors.

2.6.6.2. Thermostat set-up within the software.

2.6.6.3. Allocating temperature sensors to Thermostats.
The features and functions within this platform.

3. Home Automation Platform - Home Assistant

This is a basic guide for the home Automation platform, Home Assistant; A more advance guide is available in the appendix.

3.1. Raspberry Pi (Rpi)

3.1.1. We supply pre-loaded and configured Home Assistant software on the Raspberry Pi 4 B, with an SSD (solid state drive). We also supply an Ethernet cable and power supply.

3.1.2. For those already running their own Home Assistant, you are welcome to download our Add-ons and integrations from our website www.hydronicautomation.com.au.

3.2. Connecting Rpi to the local area network (LAN)

3.2.1. We recommend Ethernet connection not wireless.

3.2.2. Have all cables connected to the Rpi: power, Ethernet and USB for SSD.

3.2.3. Connect the Ethernet cable to the LAN router.

3.2.4. Open a browser on any device connected to the Local Area Network (LAN) router (Internet Explorer, Google Chrome Etc).

3.2.5. Web address for apple products iPhone or iPad, also Linux's systems http://rasperrypi.local:8123 (you could try on Windows 10).
For all others devices you will need to find the IP address and then add "**:8123"** to the end: For example http://10.1.1.4:8123

3.2.6. Finding IP address, you could go into your router and see connected devices look for "*Raspberrypi*" or You could use a network scanner app, such as: https://www.advanced-ip-scanner.com/
If your phone is connected to the router you could download this App: https://play.google.com/store/apps/detailsid=com.overlook.android.fing&hl=en_IN&gl=US.

3.2.7. Once you have the IP address, you will be prompted with Home Assistant

Default log in screen:

3.2.7.1. Username: Demo

3.2.7.2. Password: 1234567

3.3. You are now logged in as an administrator.

3.3.1. To set up your own Username and Password Select the Icon "Configuration" bottom left
Scroll down left side select "Users"; Bottom left "+ ADD USER"

3.3.2. To delete a user and or change password double click the Username.

3.3.3. If setting up for end users, you can decide to give administrator access.

3.3.4. Password changed for non-administrators:

3.3.5. The bottom left will have an Icon as a circle with either an initial of your Username; For example: "Demo" or "D", select.

3.3.5.1. On the right side scroll down you will see a section "Change Password"

3.3.5.2. If you forget your password you will need to email the MAC address of your Rpi : support@hydronicautomation.com.au so as to reset your password: Finding MAC address log into your Router and find Raspberrypi.

3.4. Once logged in you are at the Home Page

The left sidebar should remain unchanged after setting up, four Titles of most interest: See Figure 3.1

3.4.1. Overview;

3.4.2. WC Configurator;

3.4.3. WiringCentral Panel;

3.4.4. Configuration;

3.4.5. Supervisor (Less Important)

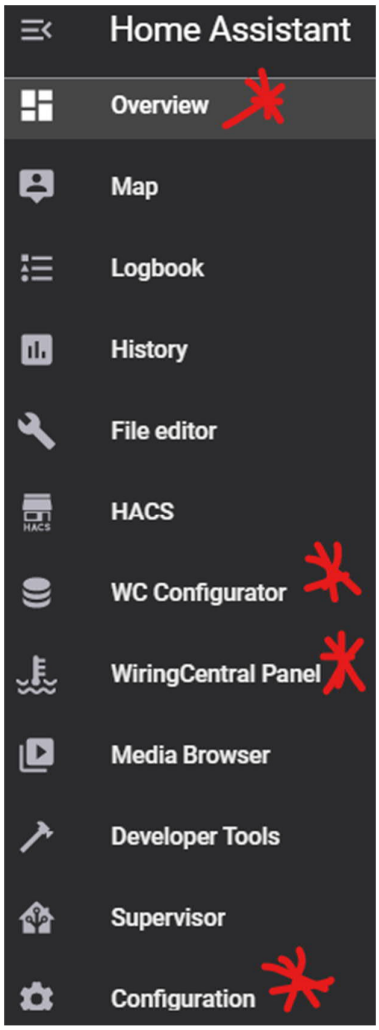

Figure 3.1

3.5. Overview

3.5.1. This has headings across the top, which may change for your setup.

3.5.2. "Home" heading should display your thermostats; Refer to 6.2 Setting up the Thermostats

3.5.3. Three dots at the top right, enable you to edit this header and contents below.
More features and functionality are discussed in the Appendix - *Advance Section Home Assistant*.

3.6. WC configurator

This is configuring the WC Board with the sensors, relays and thermostats.
Refer to:

- *4.3.6 Connecting DS18b20 Temperature sensors to the Wiring Center*
- *4.6 Allocating sensors to thermostats.*
- *6.4 Controlling more than 2 circuits on the one Zone / Thermostat*

3.7. WiringCentral Panel

3.7.1. This lists the eight thermostats for each WC Board connected; if using two WC Boards a total of 16 thermostat will be displayed.

3.7.2. Even if only using some of the thermostats, all 8 thermostats will be displayed per WC Board. If they are not connected to a temperature sensor, temperature reading will display -1.
Also if they are not connected to an actuator they will control nothing.

3.7.3. You could still turn this thermostat on and see a yellow LED on the WC Board but as its not connected to anything, no circuits will come on. However this will still turn the heat source and or the circulation pumps on.

3.7.4. The thermostats display the Mac-address (see Figure 3.2) before re-naming, this address you will need to use when setting up thermostats in section *6 Thermostats*. (When allocating the thermostats the MAC address will not be capitalized.)

3.7.5. On initial setup it's good to see all the thermostats and check the temperature sensors are working before setting up the Overview page.

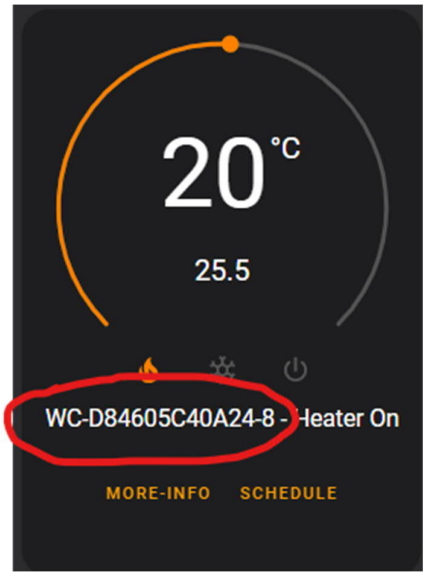

Figure 3.2

3.8. Configuration

This can modify and create features and functionality within Home Assistant.
Adding users and or changing passwords See: 3.3 *You are now logged in as an administrator.*
This menu title is mostly outside the scope of this manual, some additional information is provided in the Advance section.

4. Temperature Sensors:

4.1. Wired Temperature Sensors:

4.1.1. Wall Mounted DS18b20 (most common);

4.1.2. Probe in Concrete slab DS187b20;

4.1.3. NTC wall mounted and or placed in the concrete;

4.2. Wireless Temperature sensors:

4.2.1. Battery operated;

4.2.2. USB C powered Wireless connection to the router;

4.3. Wired Temperature Sensor: DS18b20

4.3.1. Run the Cat 6 cable from the manifold to each room, this needs to be done before sheeting.

4.3.2. If running the standard sensors (DS18b20), you can run one cable from the manifold to each room in a daisy chain style.

4.3.3. Use a light switch cover with a back plate (or similar) to position the cable sticking out the wall, for each room. See Figure 4.1

Figure 4.1

4.3.4. Sensor Placement
Where in the room to place the temperature sensors for the thermostat? Ideally you are trying to record an accurate temperature of that room. Things to consider for sensor placement:

- Do not place near windows
- Do not place near external doors
- Do not place on external walls if possible.
- Ideally place 1500mm up on the wall.
- Place on internal walls that should reflect the room temperature.

4.3.5. On fitting off the sensors to the wall

- Connect RJ45 connectors to both ends of the Cat 6 cable.
- If using daisy chain method, you need a splitter connector 1 into 2 see Figure 4.3
- These should be connected and tested before sheeting walls; the sensor enclosures will not be large enough to cover the hole if inserting the splitter after sheeting.
- Ideally place 1500mm up on the wall.
- You could also join the wires and cover with heat shrink which can be done after sheeting.
- It would be wise to check the connection for each cable with a cable tester if possible. See Figure 4.2

Figure 4.2

Figure 4.3

4.3.6. Connecting DS18b20 Temperature sensors to the Wiring Center

4.3.6.1. Connect all temperature sensors to the cables with the RJ45 connector in the rooms.

4.3.6.2. Make a note of the Mac address label on the sensor for each room.

4.3.6.3. At the manifold end connect the Temperature sensor cables to the Sensor Hub See Figure 4.4

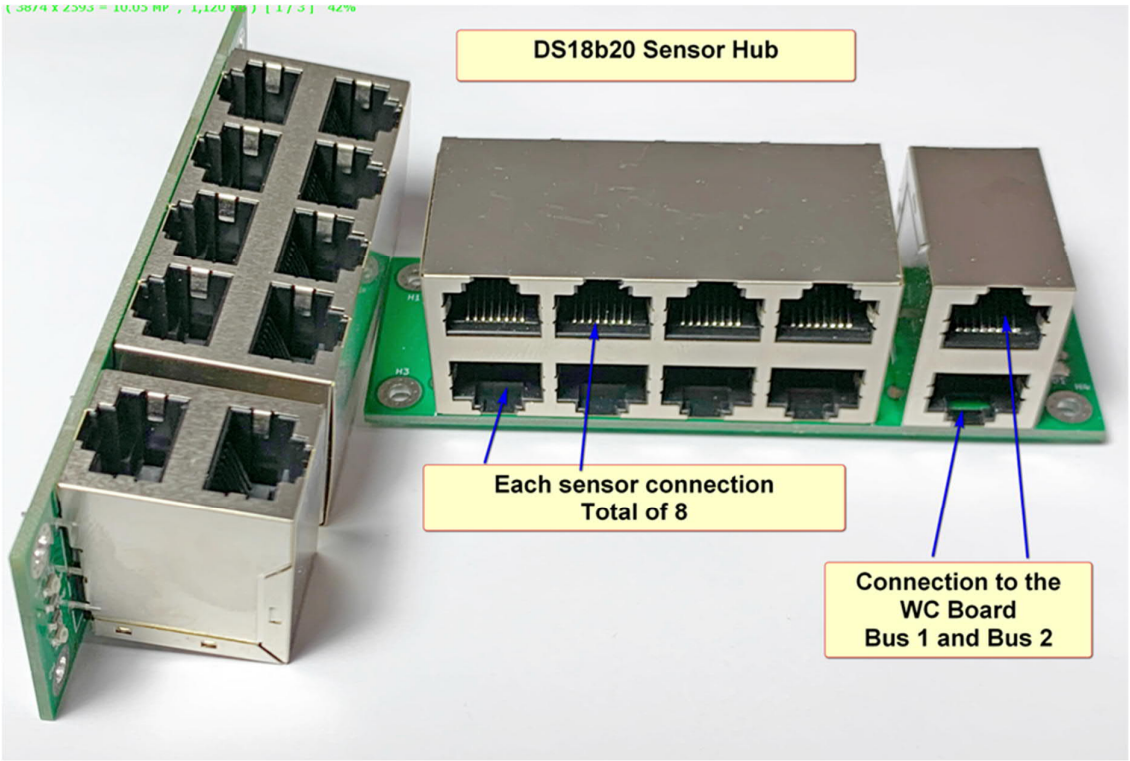

Figure 4.4

4.3.6.4. Connect the hub to the Wiring Center Controller Bus port 1 and 2. See Figure 5.1

4.3.6.5. Open Home Assistant Refer to section 3: Home Automation Platform - Home Assistant

4.3.6.6. You want to open the "WC configurator" page Icon on the left
This page will list the Wiring Center Controllers See Figure 4.3

4.3.6.7. If more than one WC Controller is displayed, you will need to connect one at a time to identify the correct WC controller, reboot required on each disconnect and reconnect. (WC – 1234678 is a Demo only)

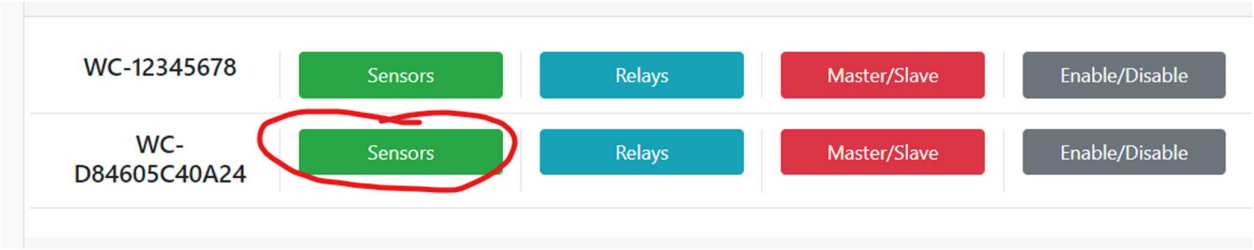

Figure 4.5

4.3.6.8. From Figure 4.5 you need to select *Sensors*

4.3.6.9. On the right-hand side is a list which displays the connected and operational temperature sensors MAC address See Figure 4.6

4.3.6.10. Refer to 4.6 Allocating sensors to thermostats.

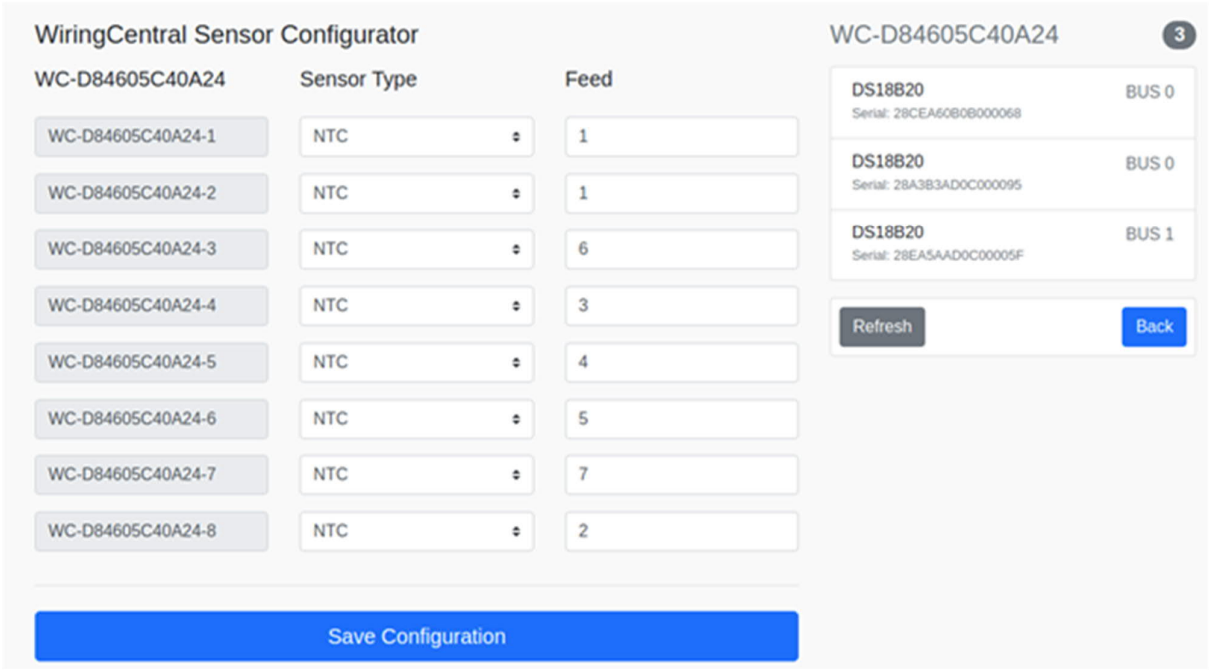

Figure 4.6

4.4.1. To place the sensor probe within the concrete slab, conduit or circuit pipe 16mm is placed from each room back to the manifold, slab end needs to be blocked, installed the same time as the circuit pipes, usually placed underneath the circuit pipes.

4.4.2. If it's not possible to place (or replace) a probe in a single piece of conduit, (simply too far and or too many bends), you should place two probes in the conduit for back up purposes, this probe needs to be placed during pipe placement.

4.4.3. On fitting off, the sensor probes
The sensor probes need to be placed in the conduit making sure you have correct cable length. The end will need to be terminated with RJ45 connector: See Figure 4.7 Connecting the probes to the WC board is the same procedure above, please follow Section *4.3.6 Connecting DS18b20 Temperature sensors to the Wiring Center*

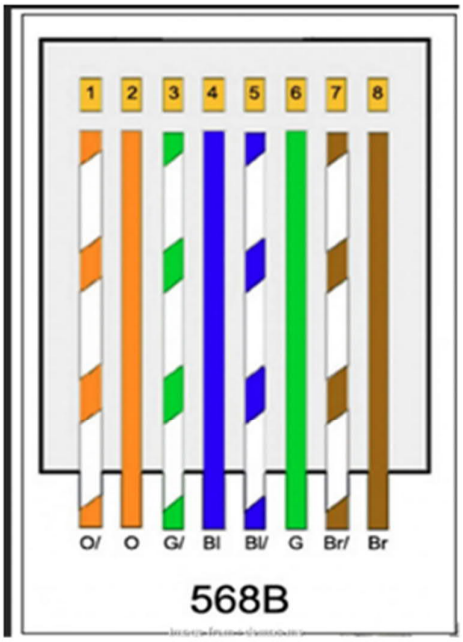

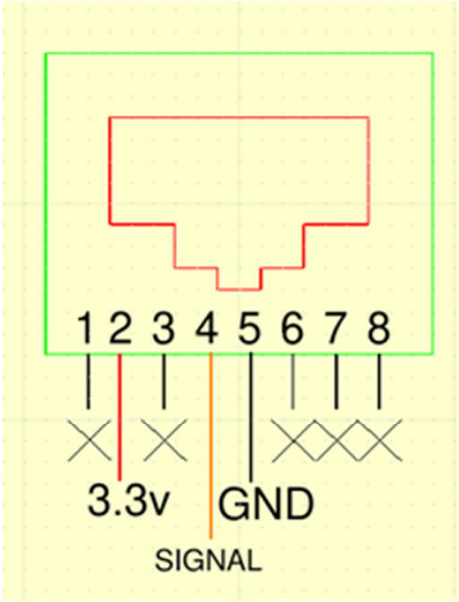

Figure 4.7

4.5. NTC sensor probes

4.5.1. The procedure for placing these types of sensors for both on the wall and or in the concrete slab is the same as above please read Sections *4.3 Wired Temperature Sensor: DS18b20* and 4.4. *Wired Temperature Sensor DS18b20 probe*.
However, the wiring, connection to the WC board and the software set up is also different.

4.5.2. NTC temperature requires an additional plug-in PCB on to the WC Board, two wires are connected for each sensor, wires can be wired either side, the connectors can be unplugged from the PCB to make installation easier.

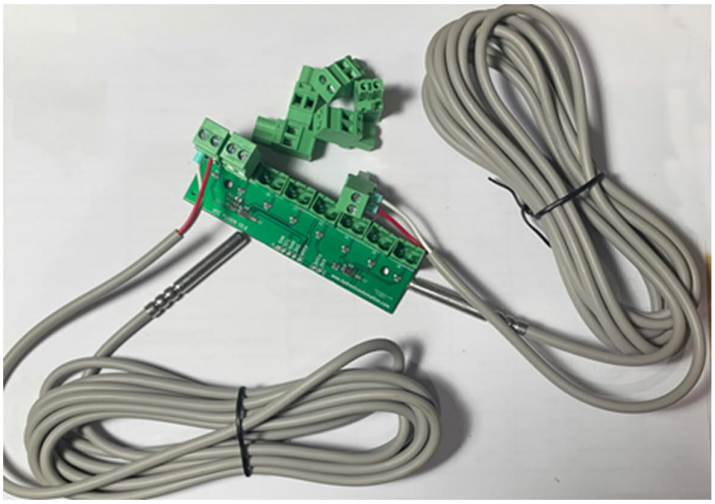

Figure 4.8

4.5.3. Keep a record of what sensor location is wired into what port on the board.

4.5.4. Any sensor can be wired to any port.

4.5.5. Open Home Assistant Refer to Section 3: Home Automation Platform - Home Assistant.

4.5.6. You want to open the "*WC configurator*" page Icon on the left

4.5.7. This page will list the Wiring Centre Controllers (WC Controller) See Figure 4.5

4.5.8. If more than one WC Controller displayed, you will need to connect one at a time to identify the correct WC Controller, reboot required on each disconnect and reconnect.

4.5.9. You need to select *Sensors.*

4.6. Allocating sensors to thermostats.

4.6.1. On the right-hand side is a list which displays the connected and operational DS18b20 temperature sensors see. Figure 4.6

4.6.2. On the left side there is a table with three columns.

4.6.3. First column lists the thermostats 1 – 8;
These correspond to the Actuators on the WC Board.
You will need to take note of these MAC Addresses.

4.6.4. Second column is "Sensor" here you select the sensor type NTC, DS18b20 and SHTC (MQTT option will be discussed later).

4.6.5. The third column is allocating the sensors to corresponding the thermostat.
The ports on the NTC board correspond to NTC-1, NTC-2 etc.
For DS18b20 and SHTC you will select one from the drop-down box.

4.7. Wireless Temperature sensors ESPNOW

4.7.1. You can power with a USB C cable or 3.7v battery 18650.

4.7.2. You must use the dip switch, bottom right - left is battery or right is USB.

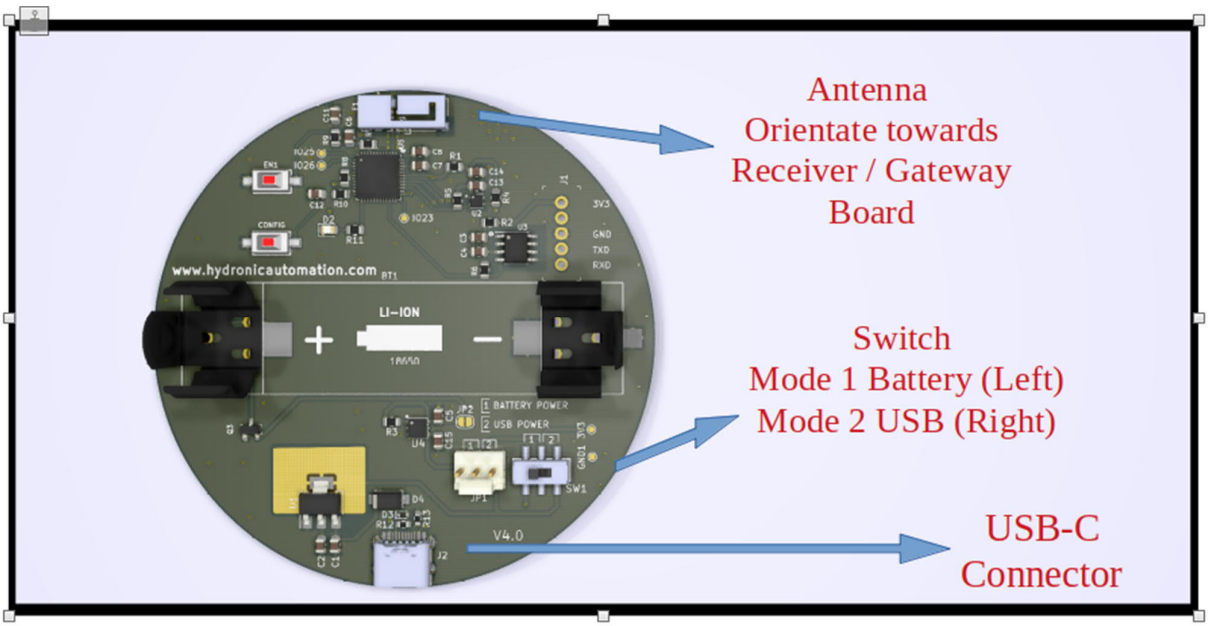

Figure 4.9

4.7.3. The wireless sensor can communicate to one of three devices:

4.7.3.1. to the LAN router,

4.7.3.2. Receiver Board or

4.7.3.3. via a Gateway board.

4.7.4. The Gateway Board is used if the wireless distance to the Receiver board is too great, you can have multiple Gateway boards to reach the Receiver Board.

4.7.5. The Receiver board accepts sensor readings wirelessly, it is connected to the LAN via Ethernet only.

4.7.6. Configuring the Sensor Board

4.7.7. Once the sensor board is powered, next step enter: *Sensor Configuration Mode*.

4.7.8. ***Step 1***: Press the EN 1(Enable 1) button and then press BOOT 1 button within 3 sec.

4.7.9. ***Step 2***: Ensure the led D2 near the BOOT1 button remains ON to confirm the sensor is in Configuration mode.

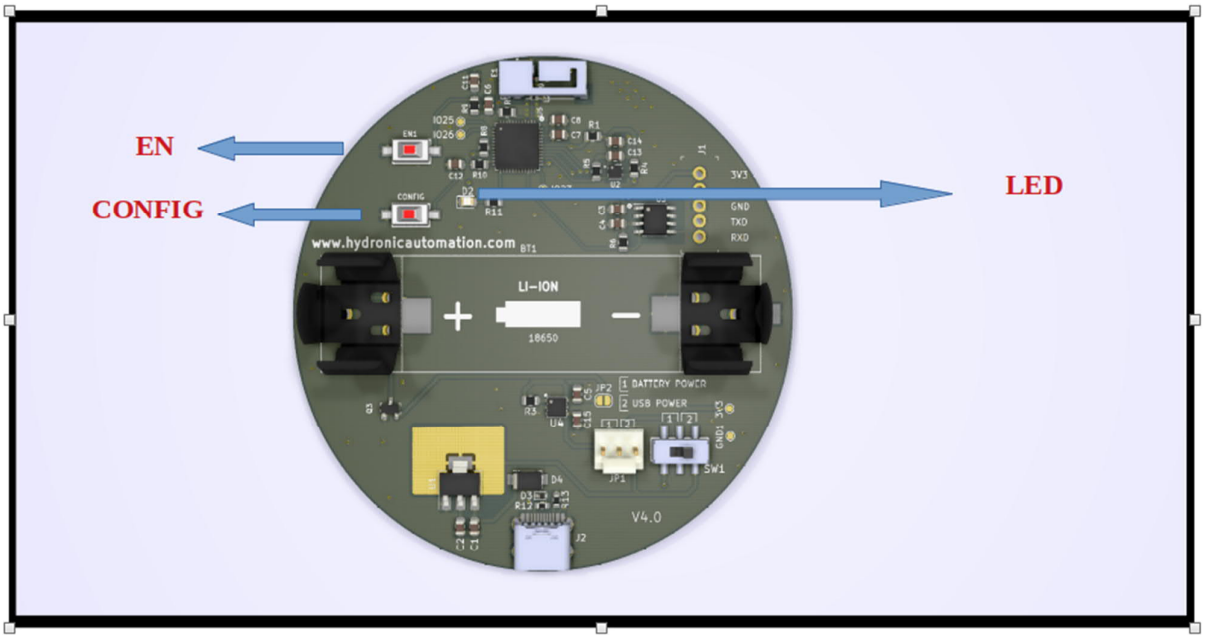

Figure 4.10

4.7.9.1. ***Step 3***: Open a computer or iPad with Wi-Fi, check for the available Wi-Fi networks. Select the sensor as the Access Point, this can be identified with a name starting with SN and has the format SN-XXXXXXXXXXXX. See Figure 4.11.

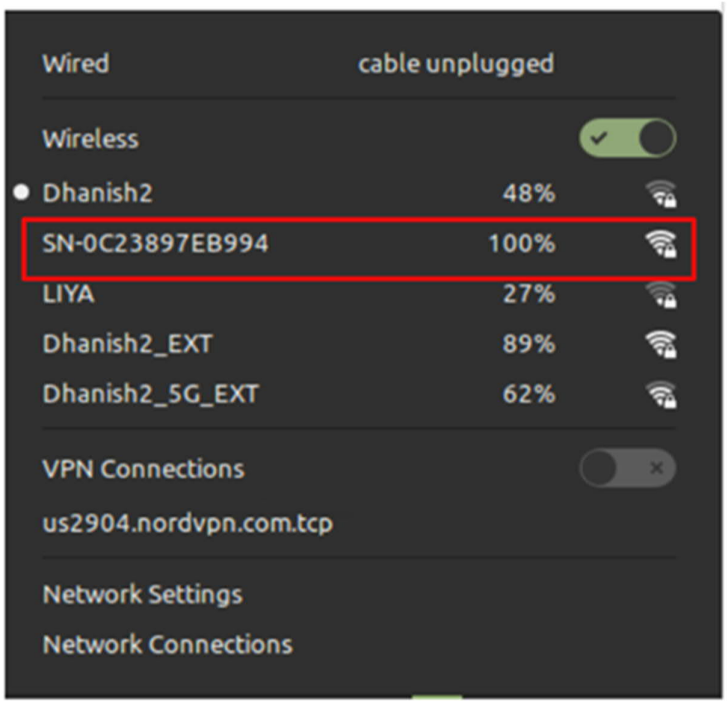

Figure 4.11

4.7.9.2. The Default password is ‘12345678’. Connection is enabled.

4.7.9.3. ***Step 4***: Open a browser window, type this ip address http://192.168.4.1 to change the configuration.
For ESPNow navigate to the bottom of the page. See Figure 4.12

4.7.9.4. Enter:
1. Receiver/Gateway Mac address
2. Sleep interval- interval at which the data will be sent to the receiver.

The longer the duration the greater battery life. On set up, you may wish to increase frequency to check sensor readings quicker.

4.7.9.5. Make a record of the "*Sensor Mac*" Address (left column) for each sensor you Configure, to match to that for each room.

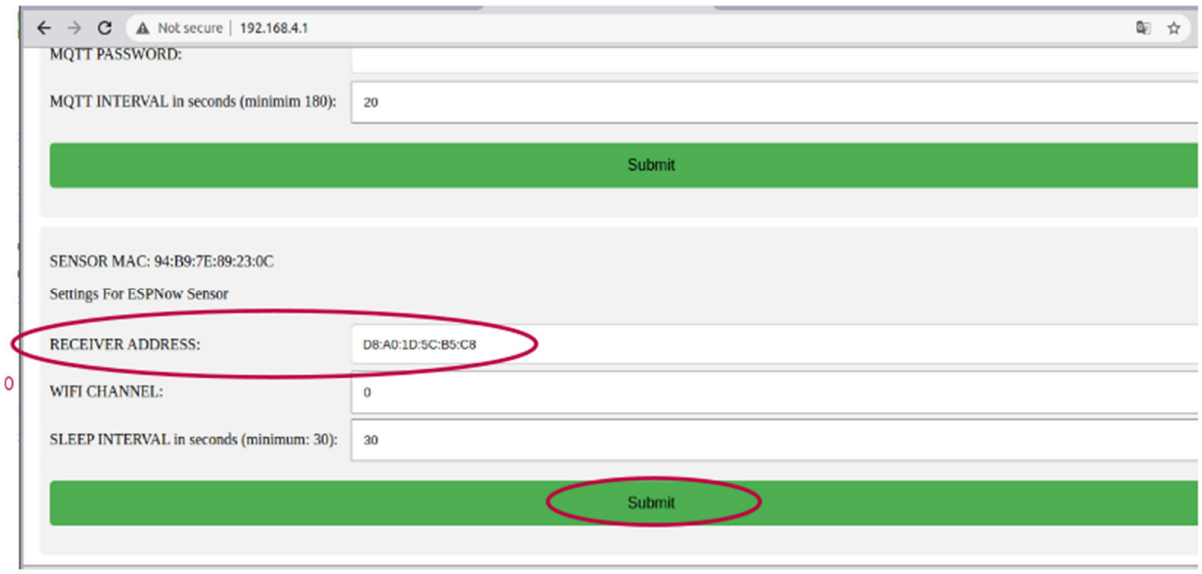

Figure 4.12

4.7.9.6. ***Step 5***: Select the Submit.

4.7.9.7. ***Step 6***: Select Reboot to save the changes.

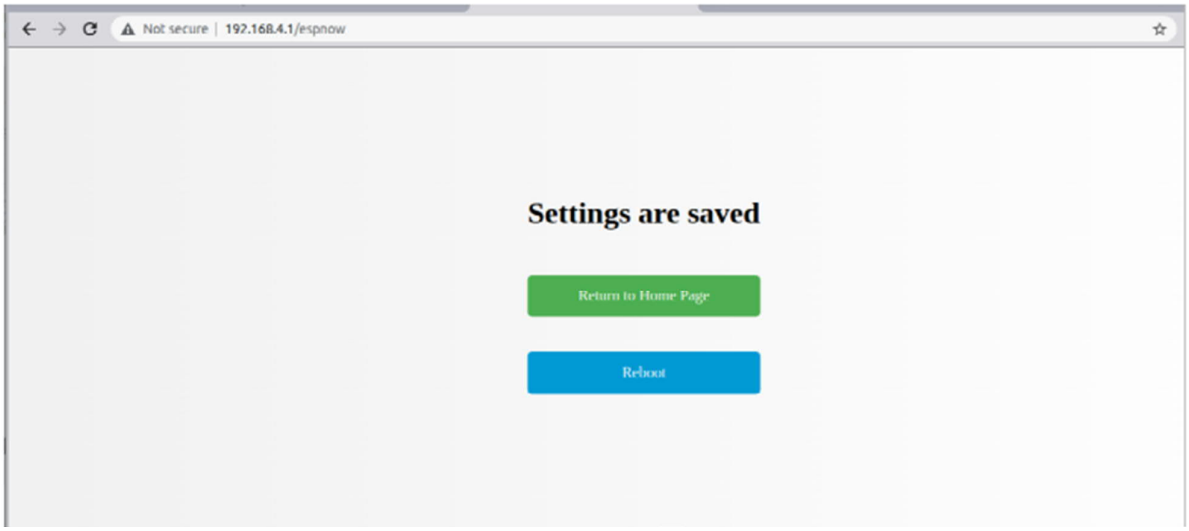

Figure 4.13

4.7.10. Over the Air (OTA) Firmware update see Appendix.

4.7.11. Receiver/Gateway Board ESPNow

4.7.11.1. Powering the Board either with USB C cable or Power over Ethernet (PoE).

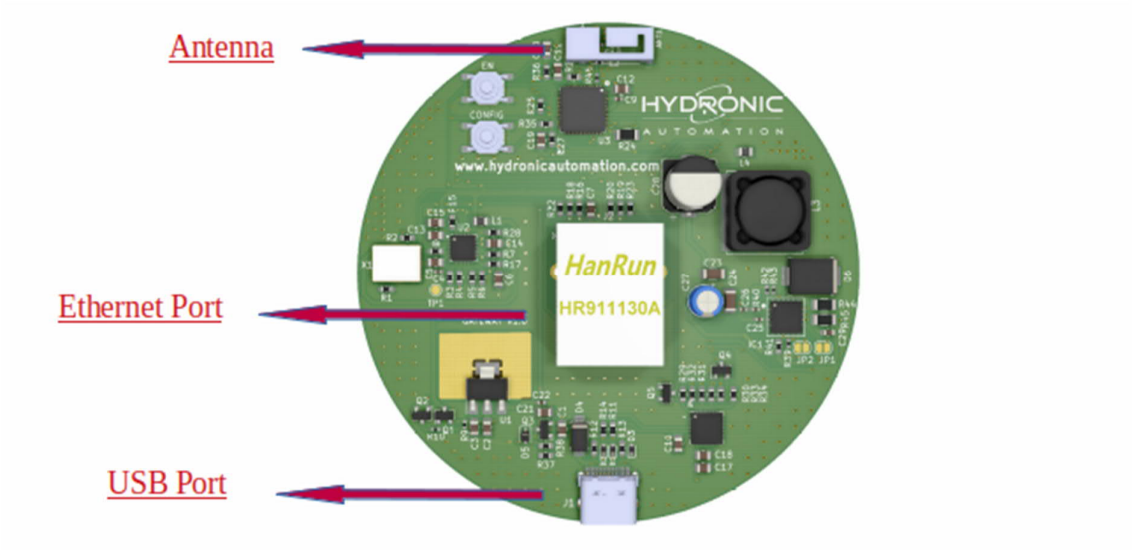

Figure 4.14

4.7.12. Entering configuration mode

4.7.12.1. ***Step 1*:** Press the EN (Enable) button and then press Config button within 3 sec

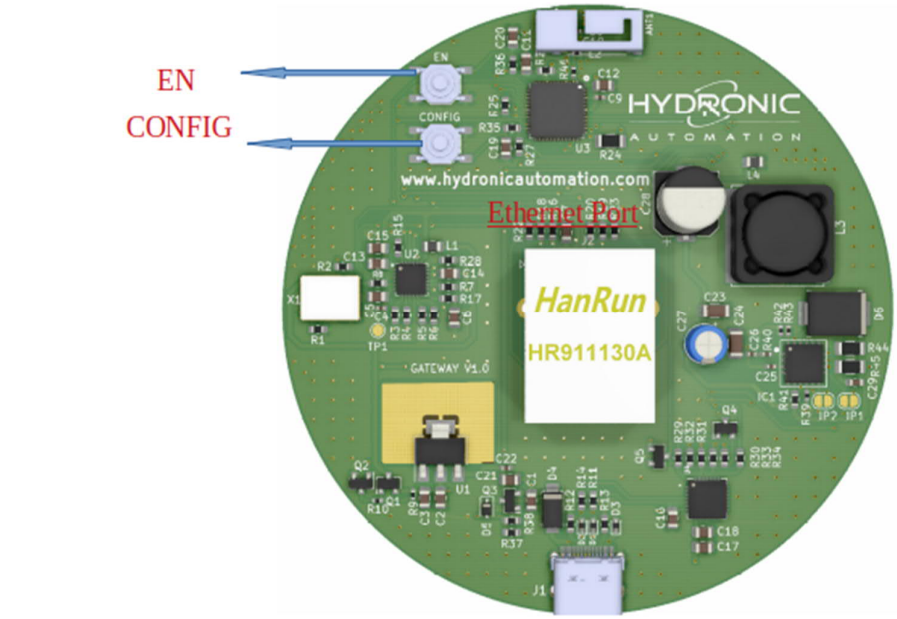

Figure 4.15

4.7.12.2. ***Step 2***: Ensure the LED

4.7.12.3. Near the Config button a led remains ON to confirm the sensor is in Configuration mode.

4.7.12.4. ***Step 3***: Open a computer or iPad with Wi-Fi, check for the available Wi-Fi networks. Select the sensor as the Access Point, this can be

identified with a name starting with SN and has the format SN-XXXXXXXXXXXX. See Figure 4.3

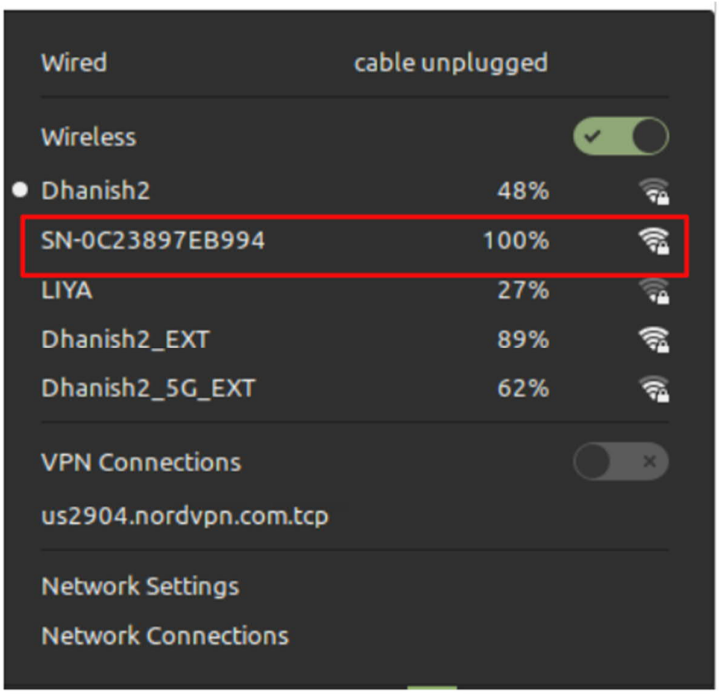

Figure 4.16

4.7.12.5. The Default password is '12345678'. Connection is enabled.

4.7.12.6. ***Step 4***: Open a browser window.

4.7.12.7. Type this ip address http://192.168.4.1 to save the configuration. For ESPNow navigate to the bottom of the page.

4.7.12.8. Enter 1. Receiver/Gateway Mac address, that you are trying to reach. The MAC address for this board is shown top left.

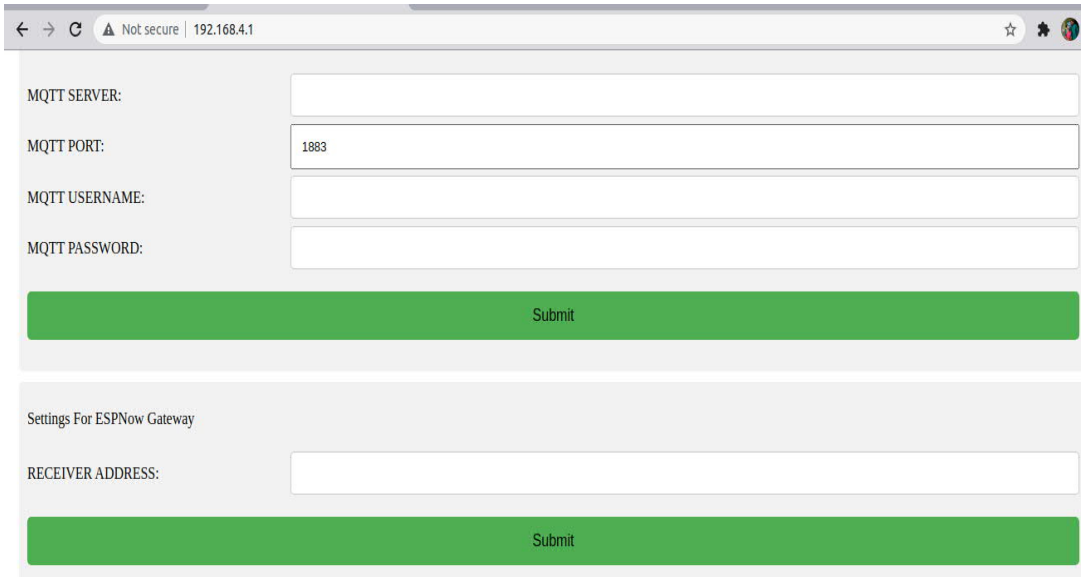

Figure 4.17

4.7.12.9. ***Step 5***: Select Submit; See Figure 4.17

4.7.12.10. ***Step 6***: Select Reboot to apply configuration changes; See Figure 4.13

4.7.12.11. Over the Air (OTA) Firmware update see The Appendix.

5. Wiring Center Controller (WC Board)

5.1. This is the heart of the hydronic automation controls.

5.1.1. Bringing together all the components of the system to be controlled from both the electrical wiring and the software on the microcontroller.

5.1.2. The WC Board enables devices to be turned on and off through all the relays.

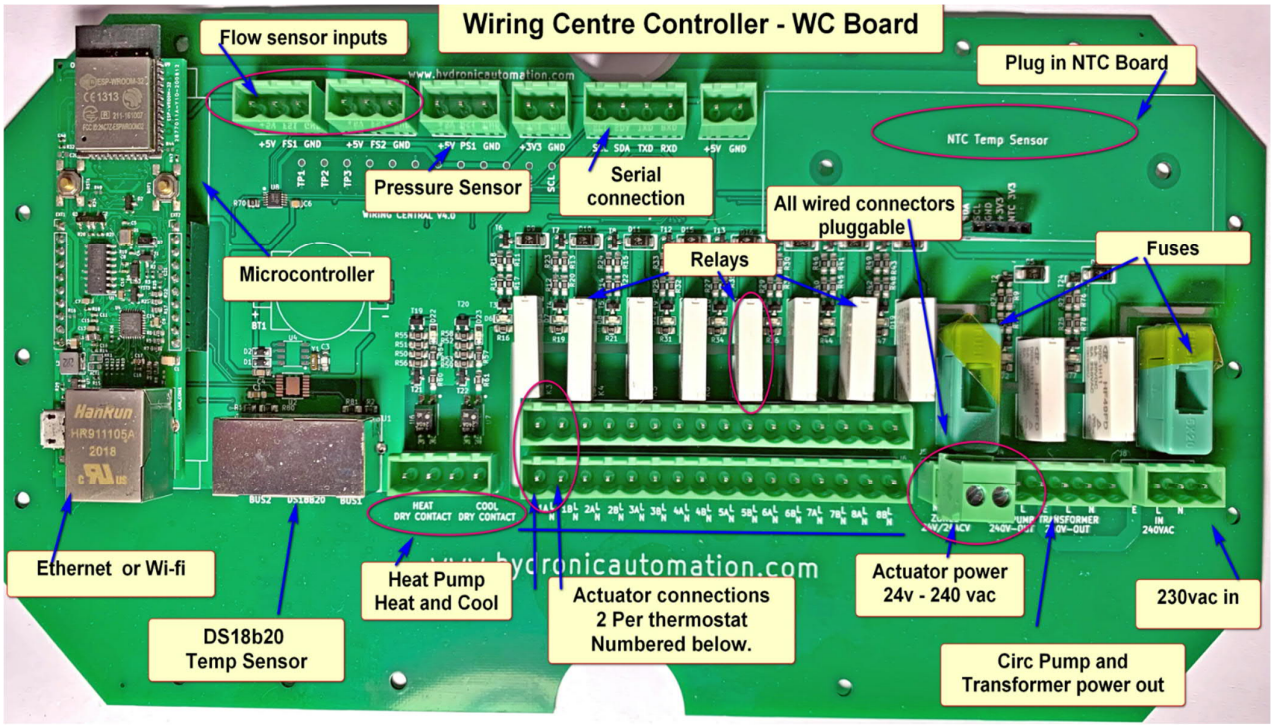

Figure 5.1

5.2. Components on the board:

5.2.1. Micro-controller: (ESP32 Pico PoE Board)
This is powered with USB C or PoE.
LAN connection either Ethernet cable or Wi-Fi, recommendation is cable if possible.

The board is a plug-in and replaceable.

5.2.2. Total 12 Relays: A yellow LED indicates relay “on”.

5.2.2.1. The thermostats (1-8) control the relays for the actuators, eight relays control 16 actuators in total, (3A 250v rated).

5.2.2.2. Two more relays, one for circulation pump and one for a transformer, both relays are activated if any of the Thermostat are “ON”.

5.2.2.3. No wasted power to the transformer in standby mode.

5.2.2.4. Finally, two more relays which are solid state SSR, these are for the heat source - Heat pump or boiler one for heat and one for cooling if a heat pump.

5.2.3. Two Ceramic Fuses
One fuse (2-amp 250v) for input power for the circulation pump and the transformer.

5.2.4. Second fuse (3-amp 250v) for the output of the transformer for the Actuators, usually 24vac.

5.2.5. DS18b20 bus port
Two ports for the ds18b20 temperature sensors, usually 4 sensors per bus.

5.2.6. Two flow sensors
These are Hall Effect Sensors from 2 litres to 25 litres.

5.2.7. Pressure sensor: rated 100 psi.

5.2.8. NTC sensor plug-in board See 4.5 NTC sensor probes

6. Thermostats

6.1. Operating the thermostat refer to the User Manual:

6.1.1. Setting mode (Heat, Cool, and Off);

6.1.2. Setting Target Temperature;

6.1.3. Setting Schedule or times.

6.2. Setting up the Thermostats

6.2.1. You will need to log into Home Assistant as an Administrator for installation and set-up.

6.2.2. Once logged in, the Icons on the left side of the screen, select “Overview” towards the top.
Along the top of screen, select the tab “Home”

Figure 6.1

6.2.3. On this screen you should see 8 thermostats, all of which are simulation only. Similar to

6.2.4. We need to allocate a thermostat feed and change the name of each thermostat.

6.2.5. Allocating Thermostat Feed

6.2.5.1. You will need the list from Figure 4.6 the first column for allocation.

6.2.5.2. On the top right of screen, are three vertical dots, <select>, then <select> “Edit Dashboard”.

6.2.5.3. You will now see “EDIT” at the bottom of each thermostat. Select EDIT; You need to select from “Entity (Required)”

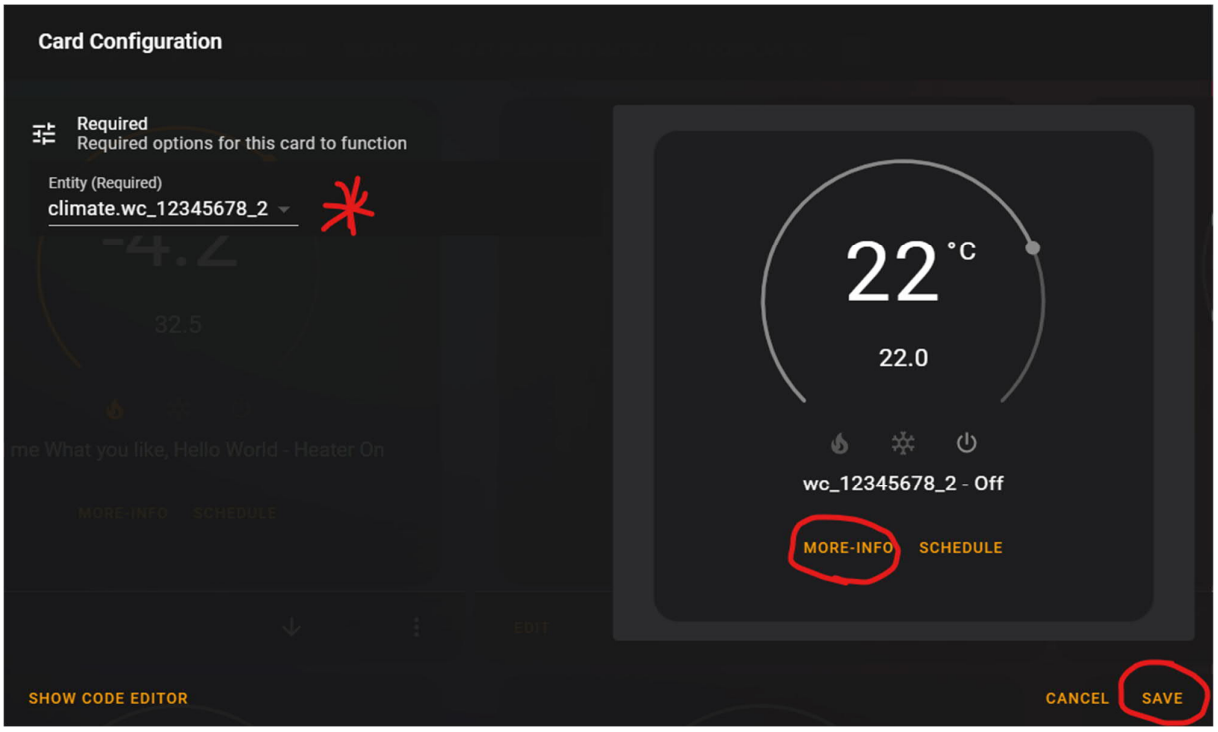

Figure 6.2

6.2.5.4. Refer to 4.6 Allocating sensors to thermostats., you should have a reference as to what each thermostat is allocated to, when doing Temp sensor allocations.

6.2.5.5. Choose any thermostat “Entity” identity from the drop down, (that displayed as per your Figure 4.6 during sensor set up). The bottom right select “SAVE”

6.2.5.6. It does not matter which order the “Entities” are chosen, if you refer to Figure 6.1 you will see an up and down arrow at the bottom of each thermostat, use this to change position of the thermostats.

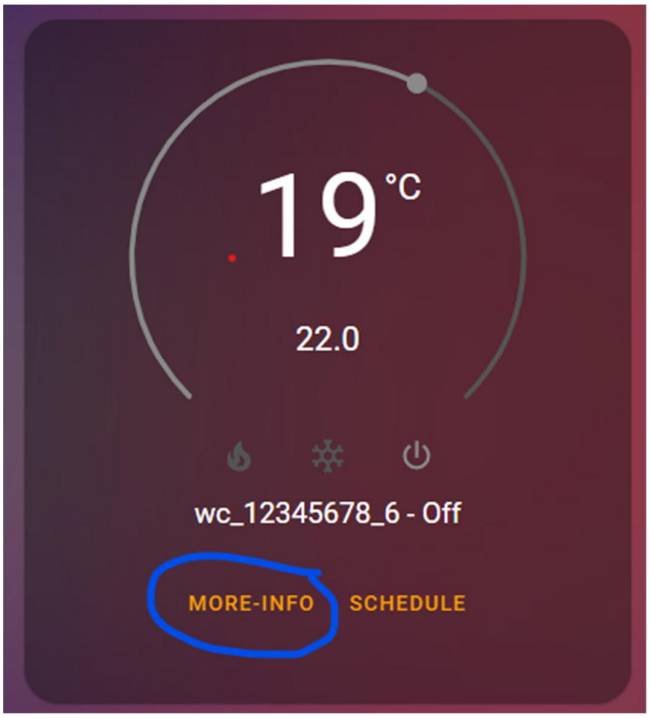

Figure 6.3

6.3. Changing the name of the thermostat:

6.3.1. Select “MORE INFO” on the Thermostat, see. Figure 6.3

6.3.2. Then select gear cog icon, top right corner. Now change the name to your preference: Lounge, Bathroom, Nursery etc. select “UPDATE” Figure 6.4

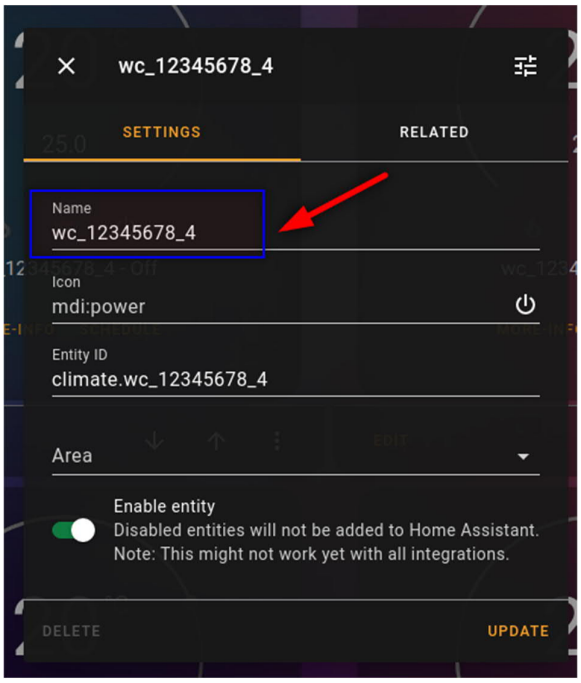

Figure 6.4

6.3.3. Repeat this process for all the thermostats that you need to setup, for all WC Boards.

6.4. Controlling more than 2 circuits on the one Zone / Thermostat

6.4.1. You will need to refer to Section4.3.6 Connecting DS18b20 Temperature sensors to the Wiring Center.

6.4.2. It’s common for a roos or zone to have more than 2 circuits on a manifold. Each WC Board is wired to have a maximum 2 actuators per zone, but this can be modified in software.

6.4.3. No longer any limit to the number of actuators wired to one zone nor any requirement to combine the wiring of actuators.

6.4.4. Within Home Assistant *open the* “WC configurator” page. Icon on the left

6.4.5. This page will list the Wiring Center Controllers See Figure 4.5

6.4.6. From Figure 4.5 you will select “MASTER/SLAVE”

Each thermostat controls one or two circuits; to control a third circuit we select the slave thermostat on the left, this will follow the master thermostat on the right. See Figure 6.5

Figure 6.5

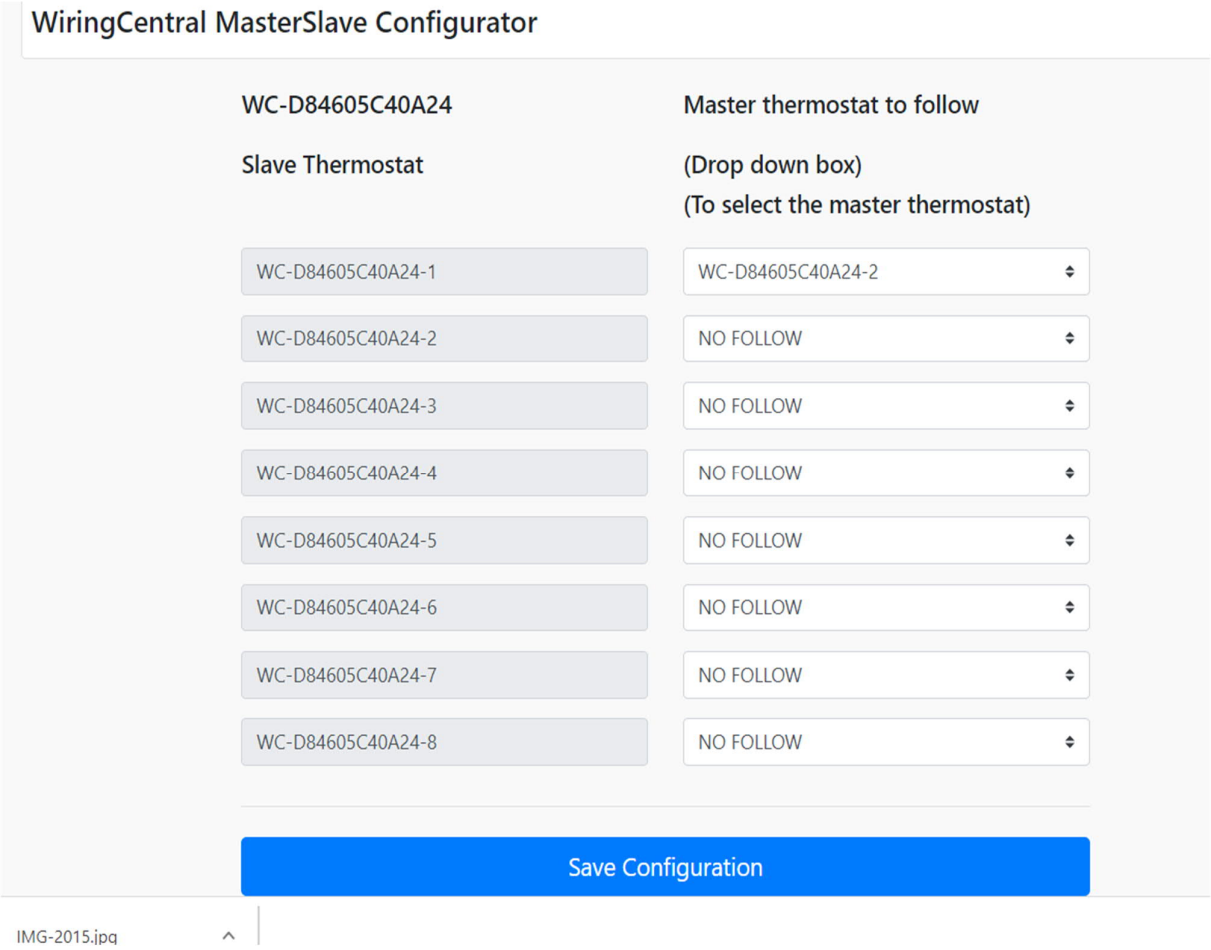

Figure 6.5

6.4.7. This can be repeated for all the thermostats, so in theory we could have 16 circuits all controlled by one thermostat.

6.4.8. This is also useful if controlling thermostats manually if this guest room on we have the bathroom on; Guest – Master and the Bathroom – Slave.